HYDRECO

HYDRAULIC SOLUTIONS PROVIDER

World Series Gear Pump

NEW: World Series Pump:

Our best one with over 60 years of experience….

HYDRECO

HYDRAULIC SOLUTIONS PROVIDER

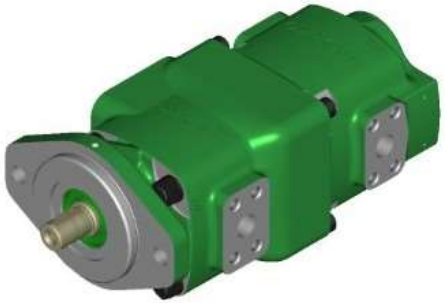

Pumps are built from tried, tested and proven components

World class performing history:

HYDRECO

HYDRAULIC SOLUTIONS PROVIDER

- We as a company have more than 60 years of experience of making world class gear pumps.

  All this knowledge we have strived to build in to this new product....!!

Higher performance products:

- By making a product delivering 350 bar pressure performance at extremely high efficiency we put ourselves in a unique market position limiting the competitive landscape.

  This is value add engineering at its best.

Quiet pumps:

- That every effort should be made to reduce the fluid borne noise generated within a hydraulic system by a gear pump.

NEW: World Series Pump

HYDRECO
HYDRAULIC SOLUTIONS PROVIDER

- The new World Series Gear Pump is more tolerant to hydraulic system contamination than closed loop piston pumps and vane pumps and gives the machine a more robust and easy to maintain system with increased “up-time”.
- All using tried and tested Six Sigma processes.
- Failure mode analyses were conducted at every stage.
- Finite Element Analysis done on all parts.

World Series Pump

Finite Elemente Analysis:

- This is a typical image from Finite Element Analysis study
- The process is complex, both in terms of the preparation of the study, running the program itself, and the analysis of the results
- By analysing the results we can determine which areas require more design attention in order to meet the design objectives
- Our WSP 40 and 50 range was successfully optimised for the best results

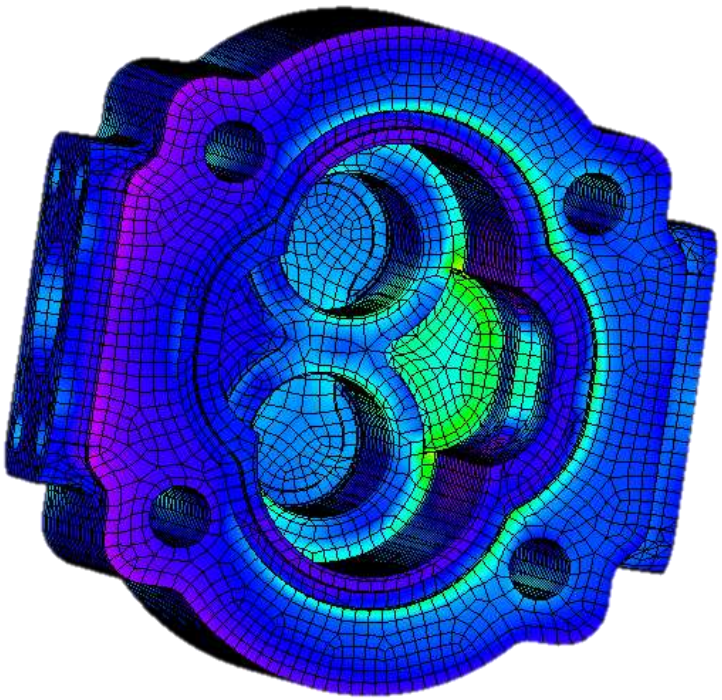

NEW: World Series Pump

HYDRECO
HYDRAULIC SOLUTIONS PROVIDER

- The Technical Specification was reviewed and new standards created
- Design Concepts were reviewed and improved where appropriate
- Materials were considered and where they could be changed and improved, they were!
- Manufacturing processes were considered during the review of Design and Materials

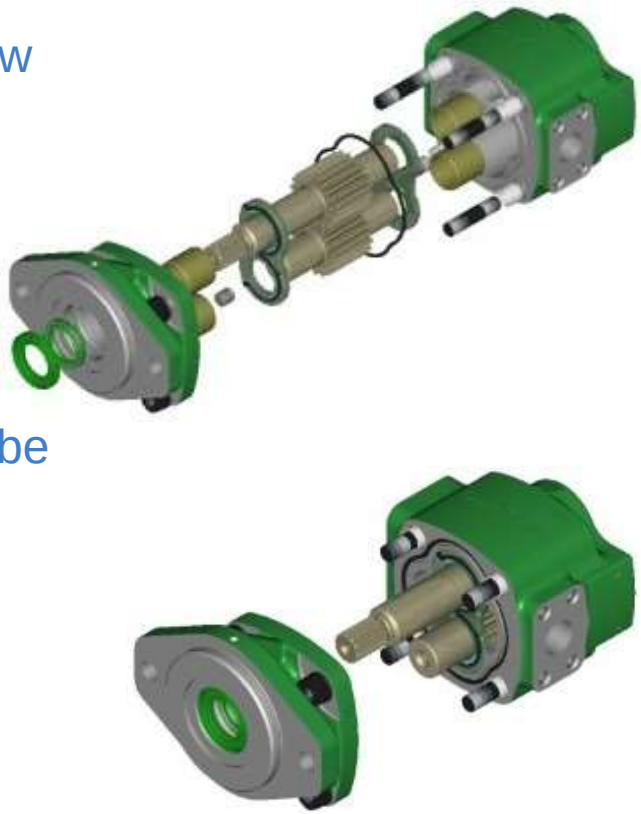

NEW: World Series Pump

HYDRECO
HYDRAULIC SOLUTIONS PROVIDER

- This is the first pump anywhere in the world potentially that has undergone such a radical design study in recent years (*most are just updates to existing product*)

- This is the first gear pump in the world to be designed to such a demanding specification (pressure capability, reliability, noise etc.)

Features and Benefits:

HYDRECO
HYDRAULIC SOLUTIONS PROVIDER

Feature:

- Our proven two piece housing designed with the latest engineering technologies to reduce weight and size allows the customer to fit the World Series Pump into more challenging applications where space is at a premium.

Benefit:

- The proven two piece design body and mounting flange gives a lower risk of leakage and reduced maintenance.

Features and Benefits:

HYDRECO
HYDRAULIC SOLUTIONS PROVIDER

Feature:

- High grade steel gears, cast iron housing and metal plain bearings give high efficiency and give a large operating speed range.

Benefit:

- This new range of pumps is designed for robustness and the capability of giving long working hours in the harshest environments.

Features and Benefits:

HYDRECO
HYDRAULIC SOLUTIONS PROVIDER

Feature:

- One piece gear and shaft construction gives increased resistance to fatigue

Benefits:

- This new range of pumps is designed for robustness and the capability of giving long working hours in the harshest environments.
- Gears and shafts are made in one piece for superior alignment, tolerancing and longevity of pump life

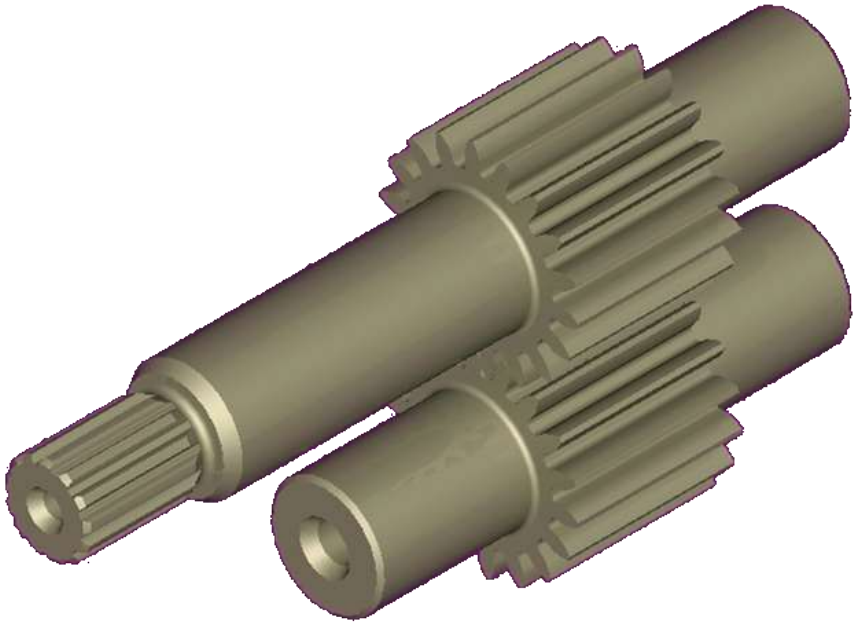

Features and Benefits:

HYDRECO
HYDRAULIC SOLUTIONS PROVIDER

Features:

- Polished large diameter journals for higher load-bearing capacity.

Benefit:

- The new World Series Pump maximises hydraulic gear pump pressure performance and allows machine designers to improve machine operation cycle time and machine competitiveness.

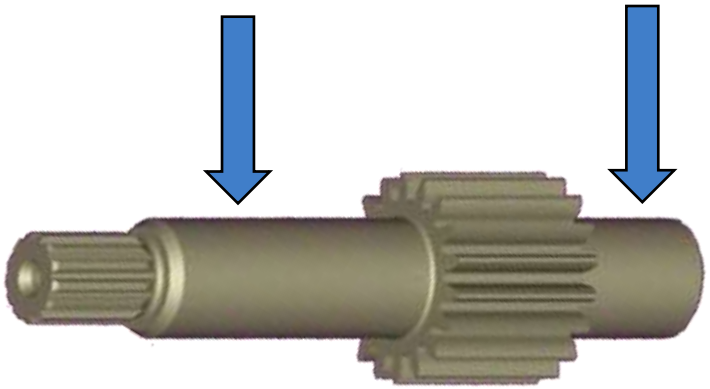

Hydreco Hydraulics has over 30 years of experience built in to these journals and metal plain bearings

Features and Benefits:

HYDRECO
HYDRAULIC SOLUTIONS PROVIDER

Feature:

- Pressure balanced aluminium wear plates with integrated seals provide optimum pump functional life.

Benefit:

- Gives improved mechanical and volumetric efficiency with subsequent reduced fuel consumption. The design also supports noise reduction.

Sealing Face

Pressure Relief Face

Hydreco Hydraulics has over 30 years of experience built in to these wear plates!

Features and Benefits:

HYDRECO
HYDRAULIC SOLUTIONS PROVIDER

Features:

- Precision machined shafts and gears made from high strength heat treated steel, the 18-teeth gears reduce pressure ripple (noise).

Benefit:

- Gives the customer an improved overall machine efficiency, lower power consumption and improved machine operational cycle time.

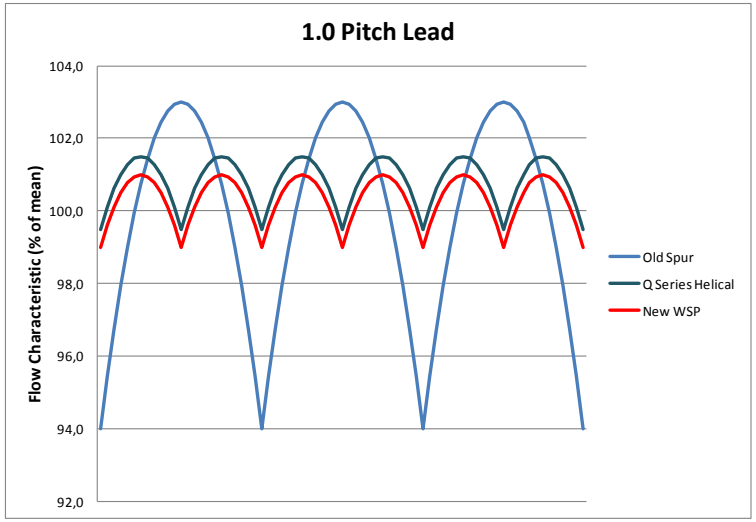

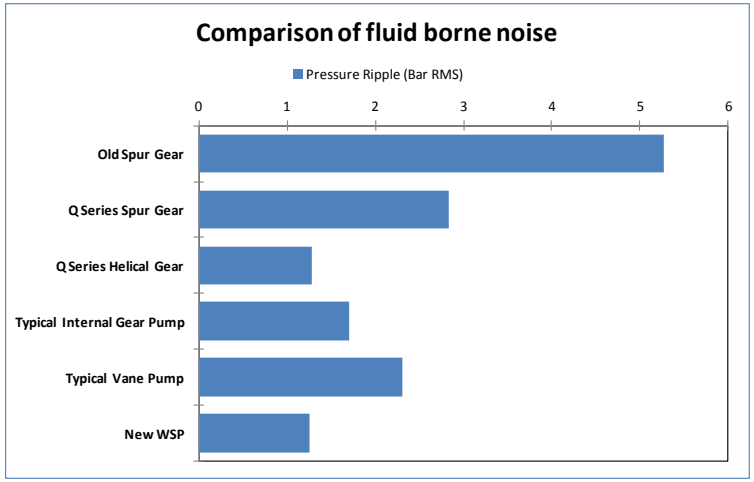

Features and Benefits:

HYDRECO
HYDRAULIC SOLUTIONS PROVIDER

Feature:

- A wide range of mounting flanges, port interfaces and pump combinations available across the range.

Benefit:

- Quick and easy to engineer to customers application. Reduced machine development time.

Multiple Pumps

HYDRECO

HYDRAULIC SOLUTIONS PROVIDER

Examples:

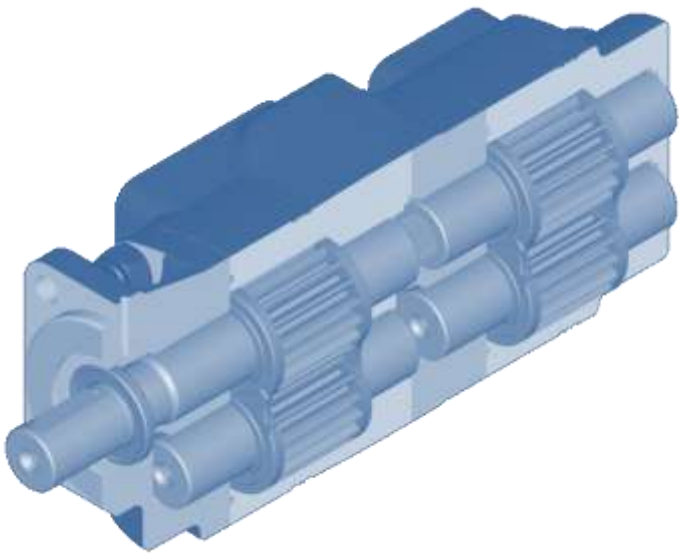

WSP50 + WSP50

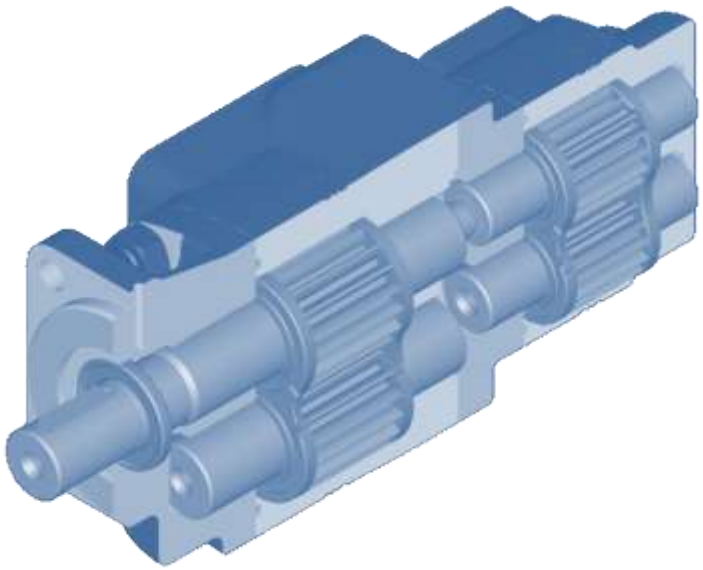

WSP50 + WSP40

Motor (reversible 50 series):

HYDRECO
HYDRAULIC SOLUTIONS PROVIDER

- Side ports
- Rear port option on smaller displacements
- Full range of shaft availability
- Full range of flange availability
- All standard port options

WSP Performance:

HYDRECO
HYDRAULIC SOLUTIONS PROVIDER

- This is a typical pump performance for a 40 Series, 34 cc/rev, pump when being run at 1500 rpm.
- Shorter facewidths (or displacements) tend to be slightly less efficient while longer facewidths (or displacements) tend to be slightly more efficient.
- Lower operating speeds will be less efficient, higher operating speeds will be more efficient.

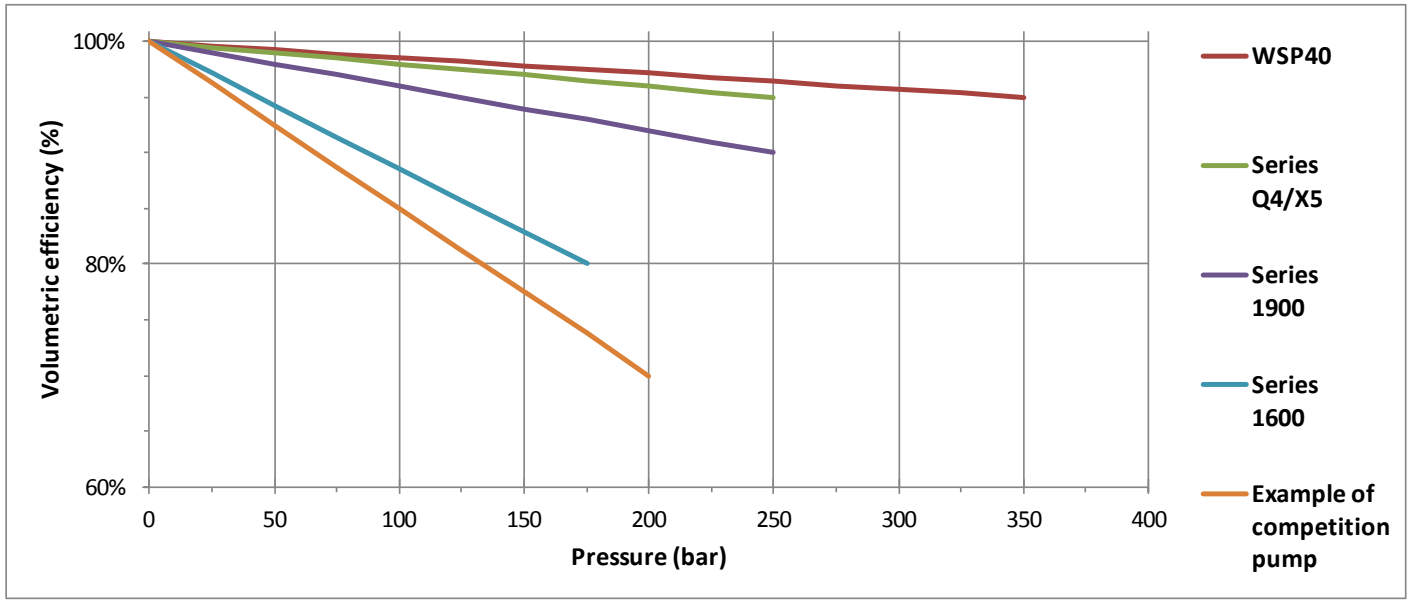

WSP Noise Performance:

HYDRECO
HYDRAULIC SOLUTIONS PROVIDER

The WSP was made with an increased number of teeth and there are consequences of this approach, some positive, some negative.

- The 18 tooth design, when compared to other pumps with less teeth, results in a significant reduction in the generation of fluid borne noise
- For a given displacement the gear length is increased when compared to other pumps with fewer teeth, however this is in part at least compensated for in the overall product design to control overall product length
- Because the root diameter is greater, larger journals and shafts are possible leading to increased pressure and loading possibilities

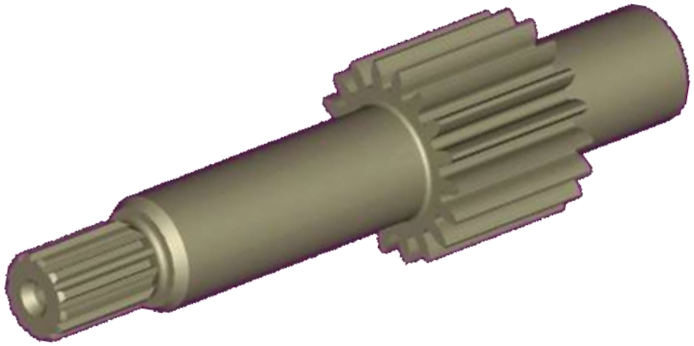

WSP Noise Performance:

HYDRECO
HYDRAULIC SOLUTIONS PROVIDER

- Older spur gears pumps have fewer teeth and hence they have to pump more oil per tooth gap.
- With the Q Series Helical and new WSP the number of teeth is increased with resulting in a reduction in the amount of oil per gap, varying both the frequency and amplitude.
- With the WSP there has also been some gear tooth form optimisation which together with the number of teeth, gives an overall reduction in pressure ripple and hence less internally generated hydraulic noise.

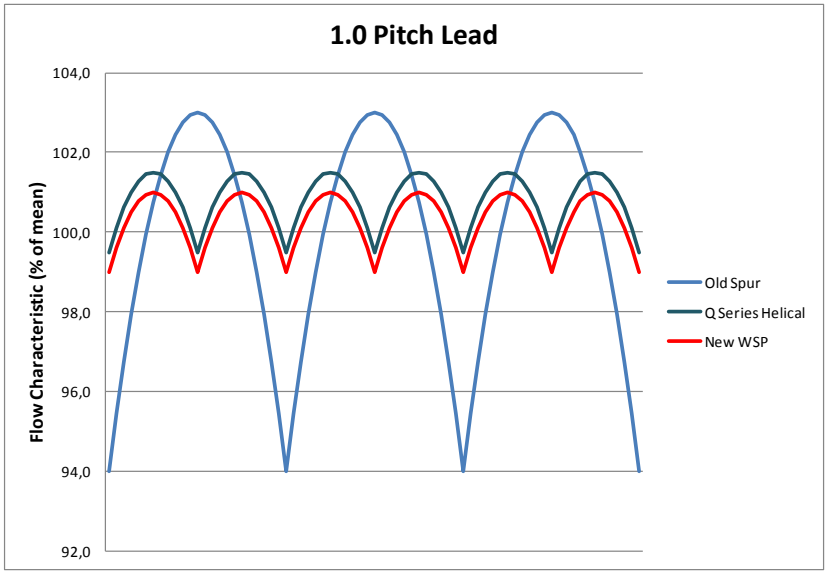

WSP Noise Performance:

HYDRECO
HYDRAULIC SOLUTIONS PROVIDER

The design of the wearplate, being hydro-dynamically balanced, is a critical feature in the product design and plays a number of key roles:

- It forms a metal to metal seal between itself and the end face of the gear to prevent internal leakage and so improve volumetric efficiency
- At the same time it controls the load between itself and the gear end face to optimise mechanical efficiency
- It controls what happens to the trapped volume at the root of the gear to both relieve any trapped oil and then allow oil fill as the gear assembly rotates
- It plays a key role in bearing lubrication
- Its design plays a key role in reducing internally generated noise

WSP Bearings and Shaft Seals:

HYDRECO
HYDRAULIC SOLUTIONS PROVIDER

- Hydreco Hydraulics have a long history of optimising bearing life for plain bearings within gear pump assemblies and this knowledge has been used in the design of these products
- Critical to success is bearing lubrication, as is required when the bearings are under load
- Shaft seals are equally important and zero leakage is the requirement. Seal design coupled with the nature of the shaft seal machining is critical to this
- Hydreco Hydraulics has collaborated with a seal manufacturer to create a seal to meet our exacting requirements

World Series Pump Test :

HYDRECO

HYDRAULIC SOLUTIONS PROVIDER

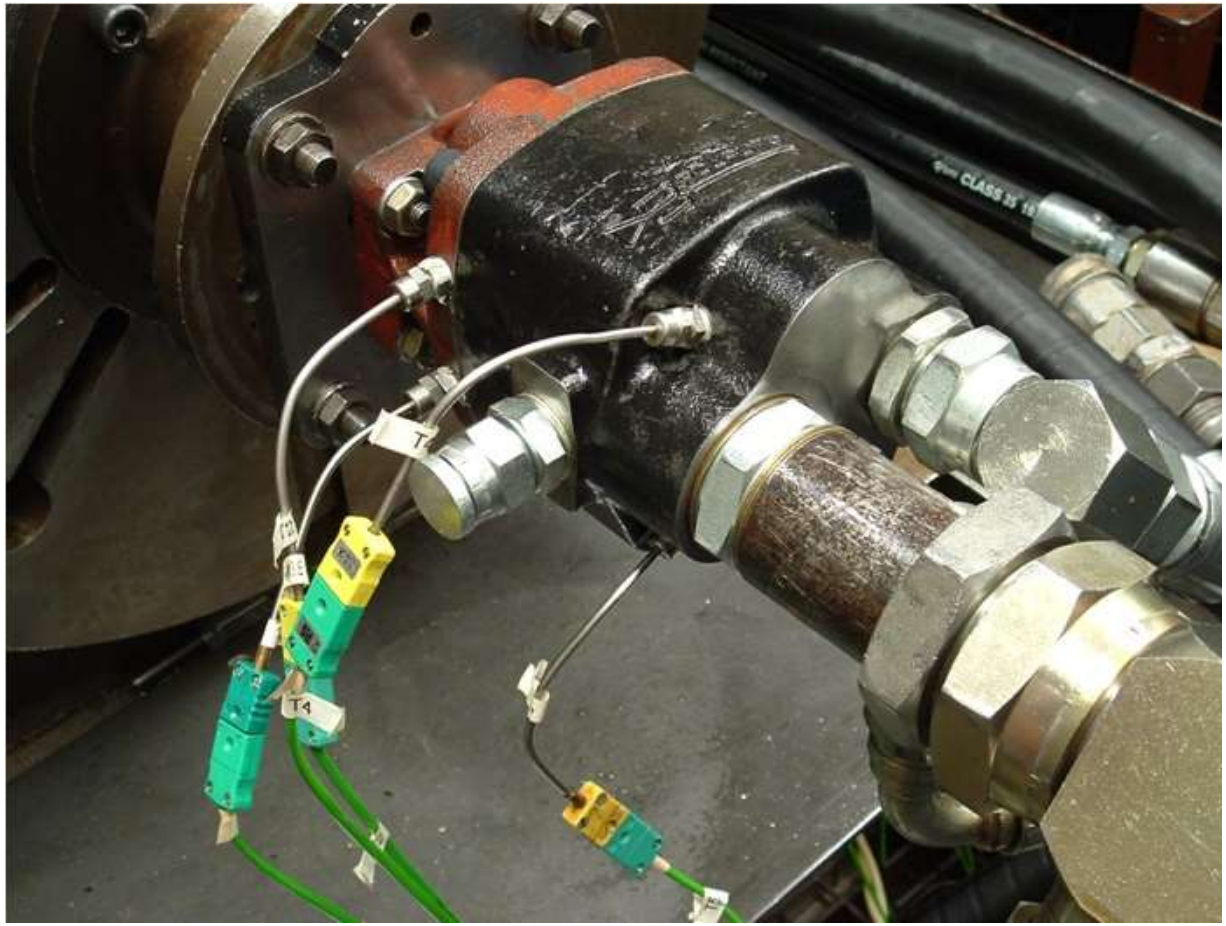

World Series Pump Product Data WSP40:

HYDRECO

HYDRAULIC SOLUTIONS PROVIDER

Model Code	Displacement		Rated pressure		Speed (at rated pressure)	
	cm^3/rev	in^3/rev	bar	psi	RPM min	RPM max
4012	12,0	0,73	350	5075	450	3500
4014	14,0	0,85	350	5075	↓	↓
4016	16,0	0,98	350	5075		
4019	19,0	1,16	350	5075		
4022	22,0	1,34	350	5075		
4025	25,0	1,53	350	5075		
4028	28,0	1,71	350	5075		
4031	31,0	1,89	350	5075		
4034	34,0	2,07	350	5075		
4038	38,0	2,32	315	4570		
4042	42,0	2,56	290	4200		
4046	46,0	2,81	275	4000		
4050	50,0	3,05	240	3480	450	3500

World Series Pump Product Data WSP50:

HYDRECO
HYDRAULIC SOLUTIONS PROVIDER

Model Code	Displacement		Rated pressure		Speed (at rated pressure)	
	cm^3/rev	in^3/rev	bar	psi	RPM min	RPM max
5030	30,0	1,83	350	5075	450	3500
5033	33,0	2,01	350	5075	↓	↓
5036	36,0	2,20	350	5075		
5040	40,0	2,44	350	5075		
5046	46,0	2,81	350	5075		
5053	53,0	3,24	320	4640		
5057	57,0	3,48	300	4350		
5064	64,0	3,91	275	3990		
5074	74,0	4,52	230	3335		
5088	88,0	5,37	190	2755	450	3500

World Series Pump Product Data:

HYDRECO
HYDRAULIC SOLUTIONS PROVIDER

Speed Range	All models	450 - 3500 rev/min
Temperature	Minimum at start-up	-40°C (-40°F)
	Maximum continuous	+80°C (+176°F)
	Maximum intermittent	+100°C (+212°F)
Viscosity	Maximum at start-up	2000 mm^2/sec (9,000 SSU)
	Maximum continuous	250 mm^2/sec (1150 SSU)
	Minimum continuous	10 mm^2/sec (60 SSU)
	Optimum	15-25 mm^2/sec (78-124 SSU)
Fluid Cleanliness	To ISO4406 solid contaminant	
	Start-up period	21/17
	Maximum in service	19/15
	Optimum	16/11
	Maximum water	0.1%
Fluid Velocity	Maximum in INLET line	2.5 m/sec (8 ft/sec)
	Recommended in INLET line	1.5 m/sec (5 ft/sec)
Shaft Loads	Maximum axial load	250 N (56 lb)
	Maximum radial load	500 N (112 lb)
Fluids	All data is quoted for mineral oils HM and HV.	
	For fire resistant and environmentally aware fluids please contact your HYDRECO representative.	
Rotation	Clockwise or Anti-clockwise viewed from shaft end (not reversible).	

World Series Pump Series 40 Product Data:

HYDRECO
HYDRAULIC SOLUTIONS PROVIDER

TORQUE CURVE

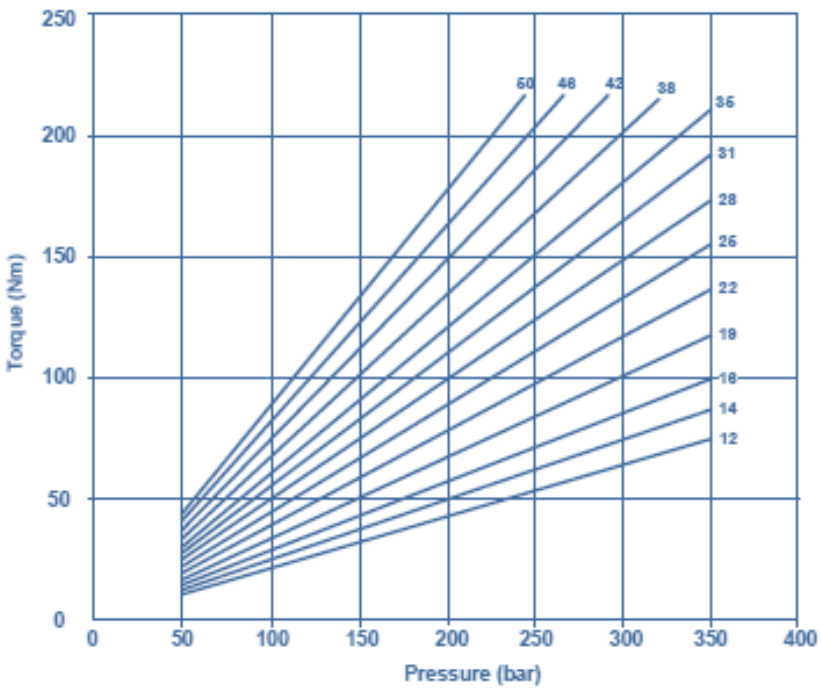

NOTE: This is typical torque data with an assumed mechanical efficiency of 90%

PUMP EFFICIENCIES

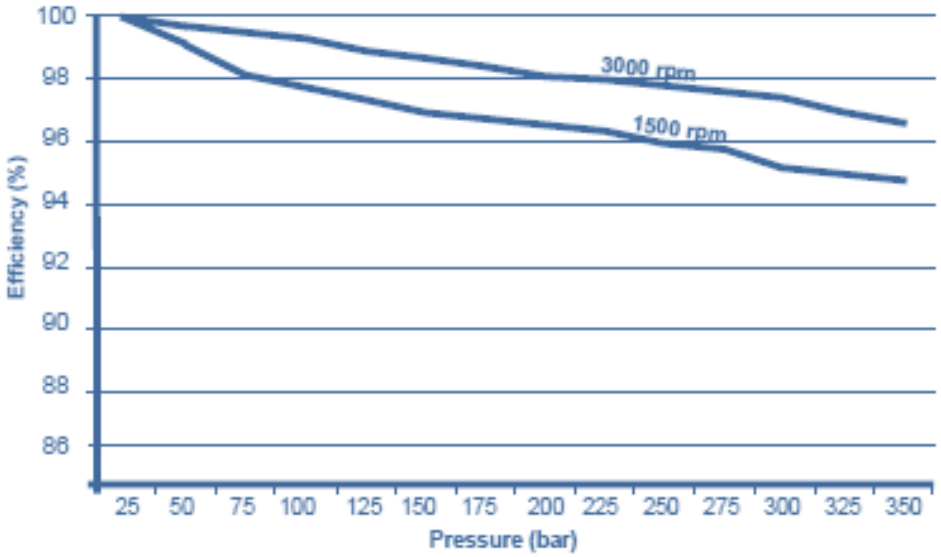

NOTE: The are actual efficiencies measured on a 34 cc/rev pump. Efficiencies for pumps at other displacements will vary from this curve

World Series Pump

HYDRECO

HYDRAULIC SOLUTIONS PROVIDER

Coming Up:

Model 60

Displacement (cm^3/rev)	Pressure (bar)
44	350
54	350
66	350
80	305
96	265
114	220
132	185

Model 70

Displacement (cm^3/rev)	Pressure (bar)
80	350
96	350
116	320
140	280
168	220
202	185

Model 80

Displacement (cm^3/rev)	Pressure (bar)
140	350
155	340
170	315
195	275
215	250
240	220

HYDRECO

HYDRAULIC SOLUTIONS PROVIDER